HIFLI
CIRCUITS
AND TEST NOTES

HI FLI EXPLAINED

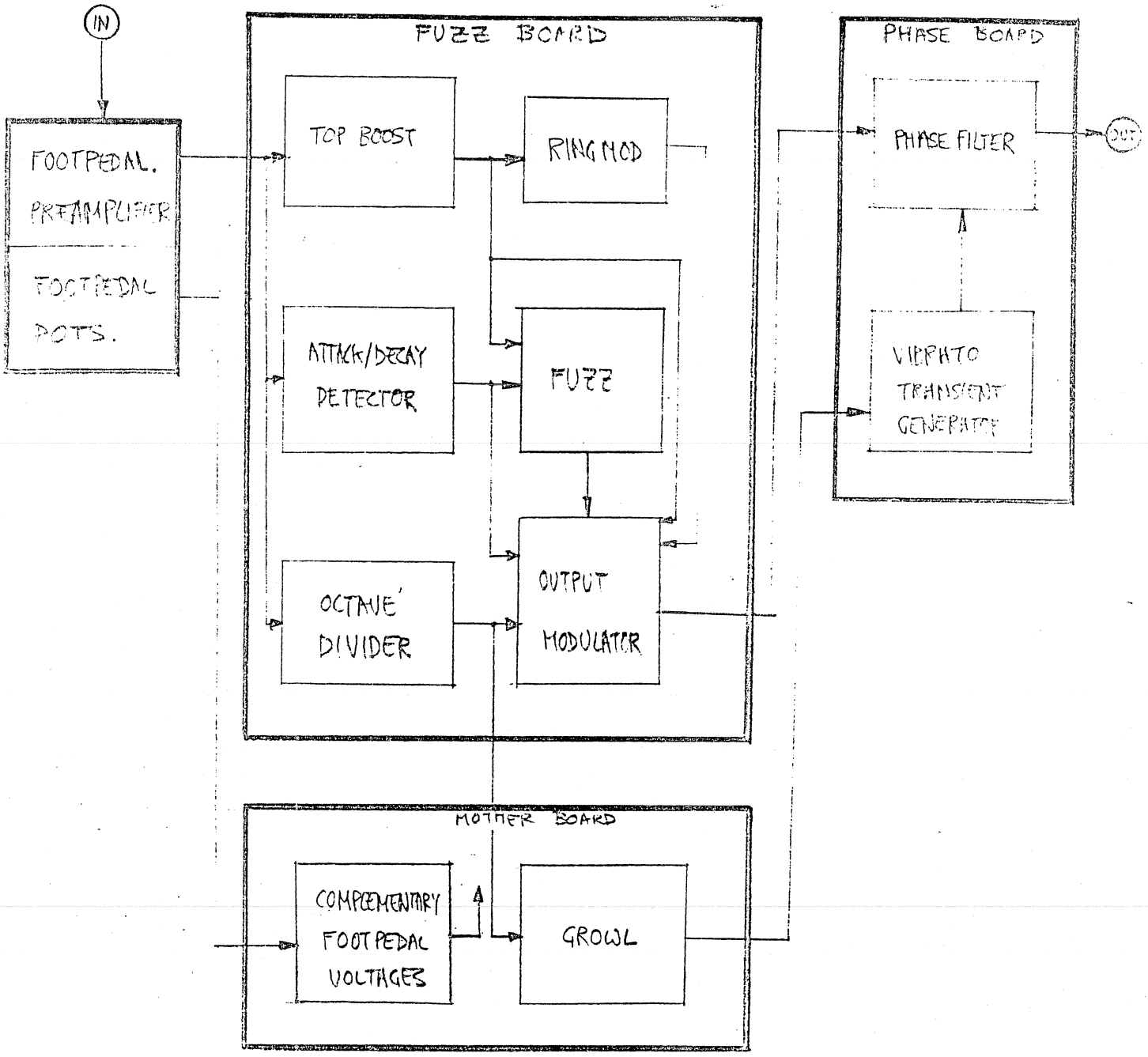

INTRODUCTION.

The Synthi Hi-Fli combines many well known processes in a single package,such as tone control,fuzz, octave dropping,modulation, phasing, waw-waw, vibrato etc.
The weighting of these effects is ostensibly at the control of the operator and can be manually set and/or controlled by a dual foot pedal and in some cases can be effected by a transient generator which,in turn, is triggered by the operator.
The purpose of this machine is to process musical signals,in particular, guitars.

CIRCUIT DESCRIPTION.

See Drawing No. II3/8.

Foot Pedal.

This is a two-stage,low noise preamplifier. The gain is approximately / R5 / VR1 . Two inputs are provided; one has an attenuator to make it possible to accept high level inputs,this being necessary because the preamplifier gain never goes less than 3.3 (i.e. 33K/IOK). The output of Q2 is AC coupled to a buffer (AI). This is because the buffer drives the rest of the Hi-Fli and it is DC coupled. Any DC offsets would stop many of the circuit functions.
The bypass footswitch provides a - I2v or floating signal to the Hi-Fli, the two footpedal pots, merely pick off a control voltage. Their pots, must be aligned to give a symetrical bipolar output swing.

Fuzz Board.

See Drawing No. II2/6.

The tone burst generator waveforms will be useful to refer to whilst reading the Fuzz and Phase board explanations.
The audio signal from the preamplifier goes to three circuits; the top boost,the octave divider and the attack decay detector.

The Attack Decay Detector. This is used to determine when the input waveform starts and stops. The signal goes into AI and A2, (I23), where it is equalised and rectified, (see TB 2,3),then it is logrithmically compressed by A6 and A2 (5,6,7) (see TB4). The compression is due to the exponential characteristics of the dual transistor A6 in the feed back loop around A2 (5,6,7). Now the compressed rectified signal is passed through a low pass filter,A3, which is a two stage Sallen Key Filter, cut off slope = -24dB/oct. The result (see TB5) is a compressed image of the input signals envelope.
To detect transients in this envelope the waveform is differentiated by C9 and R25; also D5,6 make sure that these transients are greater than ± 600mV (see TB6).
The detected transients are used to drive A4 which comprises two schmitt triggers, one used to generate a pulse on an attack A4,(5,6,7.)(see TB8) and one used to generate a pulse on a decay A4 (I23) (see TB7).
The combination of these two,produces a pulse that goes low in between the attack and decay points A5 (I23) (see TB9) and this

is used to trigger the transient generator on the phase card. Also produced is an exponential decay waveform (see TBI0); when A4,pin 7 is low CI0 is discharged via D7. When it is high,D7 is reverse biased,QI is switched on and so CI0 charges up, via the decay rate pot VRI,to 0v. This voltage is monitored by the Voltage follower A5(5,6,7) (see TBI0)

The audio input also goes into an octave divider (A7,8,9.) This circuit is primarily designed to detect the fundamental note of the input and then divided by two. It does this by having complementary envelope followers ~~and complement/ ary envelope followers~~ and complementary comparators.

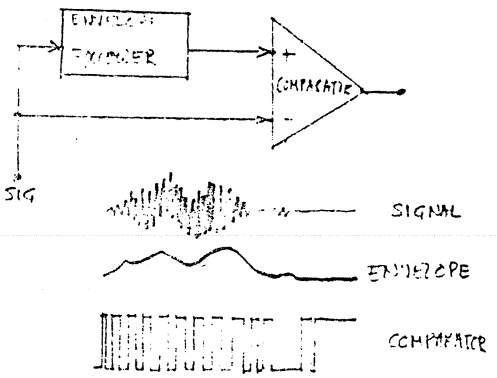

This arrangement is quite good as a fund/ emental note detector, and as a complementary system is used as well then a reasonable degree of integrity is to be expected.

The Envelope follower is made up of a perfect rectifier A7, with a fixed time constant. The comparators are A8 (see TB II,I2,I3,I4) which drives A9, a dual D flip-flop. This is a TTL device being powered by +5v which it gets from DI3 R5I. A8 sets and clears the first stage of A9 which produces a neat square wave output (see TBI5). The second half of A9 divides this by two,thus producing a sub octave signal (see TBI6) which is applied to AI0. The gain of AI0 is controlled by the suboctave slider and the output of AI0 is affected by the buzz switch which,when closed, acts as a low pass filter (see TBI7). The output of AI0 is used to affect the output modulator to give BUZZ noises.

The audio signal also goes into a top boost circuit AI4 which gives it a high frequency lift.

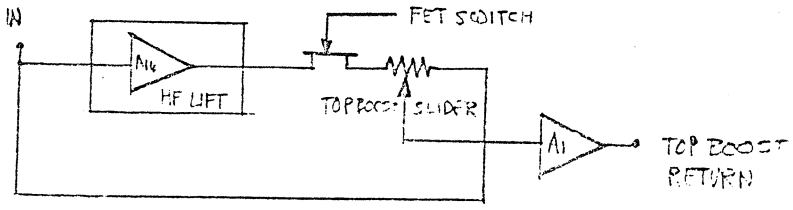

The top boost return signal is a mix of the equalised signal and the original, and is fed to the sustain fuzz,ring modulator and output modulator.

AI2 is a peak voltage detector; i.e. it remembers on CI9 the largest positive signal excursion. Therefore, when a note is struck, the peak amplitude is stored on CI9. This signal is fed via the attack rate pot to C2o (see TB20), which is buffered by AI2 (see TBI9). The purpose is to make a Fuzz box whose amplitude is proportional to the signal level but whose hamonic structure isn't.
The top boost signal is fed into Q6 which is an amplifier whose collecter load is driven by the output of AI2. Thus the signal out of AI2 defines the Fuzz modulation envelope (see TB2I). The gain of the Fuzz is controlled by AI3, also, when a stop, (end of note), is detected, transistors Q4,5 short out CI9,20 and the Fuzz ceases, ready for the next attack.

Ring Modulation. This is not truly ring modulation but an approximation. Transistors Q2,3 act as a half wave rectifier and AII as a controlled modulator, so that as a controlled amount of inverted half wave rectified signal is added to the original the fundemental can be made to completely disappear. (see TB22).

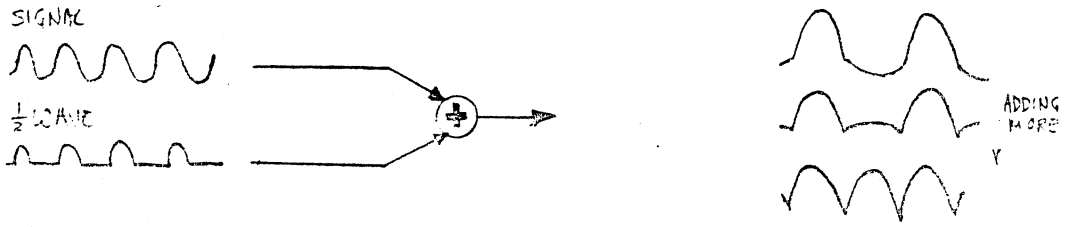

The output modulator is a FET modulator. A matched pair of FET's is used so that the modulator switches off without having need for a preset or having an undesirable gap in the modulation. Also AI6 induces voltages onto the bias FET which in turn controls the modulation FET. The output then goes to the phase board where most of the business occurs.

Phase Board.

See Drawing No.II2/7

This board is by far the most useful in terms of the effects it generates, but although it has less sections than the Fuzz board, it may prove to be more difficult to understand.
The phase board consists of basically three parts; a function generator, a set of bowstringdrivers and a phase filter. The function generator produces ramps, sine waves and attacking and decaying sine waves. The oscillator is a triangle square wave oscillator made from AI6, I5, (see TB23,24).

AI6 is a reversible integrator and AI5 is the schmitt trigger. The speed of oscillation is controlled by the current into pin 5 of AI6, the range switching between ∿ and ⩘ is acheived by transistor QI being switched on or off. The triangular output is fed to AI4 where the saturation effect of this IC. bends the ⩘ into a ∿ (see TB25) The gain of AI4 can be controlled so that it can multiply a ∿ with a ramp to produce a ∿. The output of AI4 then goes to AI3 which is a gain control,and then to AI2 which drives the LED's and the bow string drivers. Also at AI2,the 'direct Shift' is produced;that is,a DC level is added to the function. The output of AI2 goes via diodes D262-5,RI05-II0 and LED's I & 2 to the bow string drivers,the purpose of this network being to distort the function (see TB29). The ramp functions are generated by AI7,I8 and Q3. The attack rate is determined by the current into pin 5 of AI7; this I.C. being used to charge up C3,Q3 just being an emitter follower.
The capacitor C3 is reset by AI8 which is controlled by the reset pulse from the Fuzz Board (see TB 27,28) the reset pulse just causing AI8 to drive a large current into or out of C3.The mode of the ramp (i.e. up or down) is controlled by the modulation switch. When the RHS of R2I is held positive by the switch rising ramps are generated,and when it is negative the mode of AI7,AI8 is reversed and the ramps fall.
When the modulation switch in the ⩘ & ∿ modes, Q3 emitter is held high by D6,7 thus preventing the ramp generator from functioning.
In the ⩘ modes,D4,5 prevent the oscillator from oscillating. In the ⩘ modes,both ramp generator and oscillator are functioning.
The bow string drivers drive the 200 Diodes in the phase filter. The distorted output from AI2 is fed into a pair of inverters (see TB29,30,3I,32)

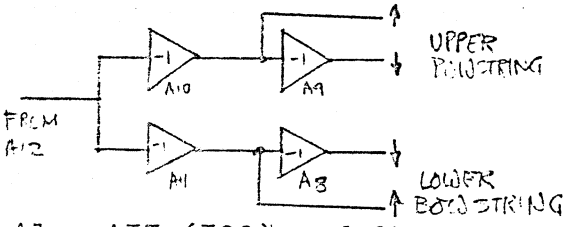

AI0(I23) adds a DC bias to the drivers which is temperature compensated by DII.

Also AII (I23) and Q4 are used as a switchable inverter; when R4I is pulled negative,(MEAW),Q4 is switched on and the lower bow string drivers response to the output of AI2 is inverted.
The bow string drivers drive a string of 20 Diodes, which are forward biased and tapped in the centre. This forms the control for the Phase Filter.

The Phase Filter is a phase delay line,having a delay of up to I2π radians. Each section can give a maximum of π,phase shift.

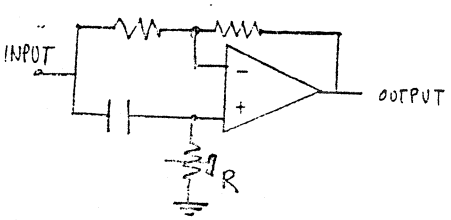

The phase shift circuit is a conventional AII pass filter;i.e. a filter that has a fixed amplitude response, but a frequency sensitive phase response.
Alternatively,for a fixed input frequency,the output phase can be varied by varying R. In the case of the Hi-Fli,R is the diode string. Using a controlled phase delay,it is possible to generate vibrato,phasing,

(swept notch) and waa-waw (swept peaks)sounds. To do this we need the services of some routing switches,viz Q5-II.

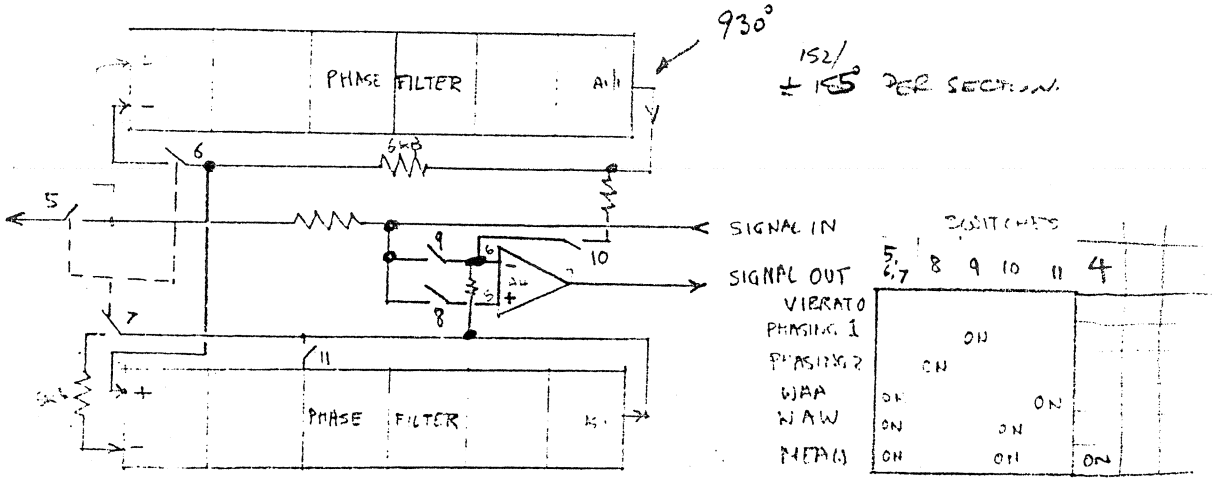

VIBRATO. All switches open.

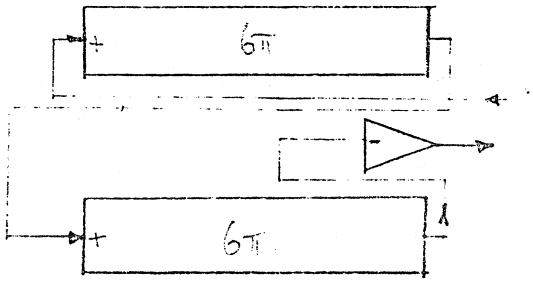

The signal goes through all the phase filters and out the other end. The varying phase shift manifests itself as Vibrato,(i.e. Frequency modulation)

Phasing I.

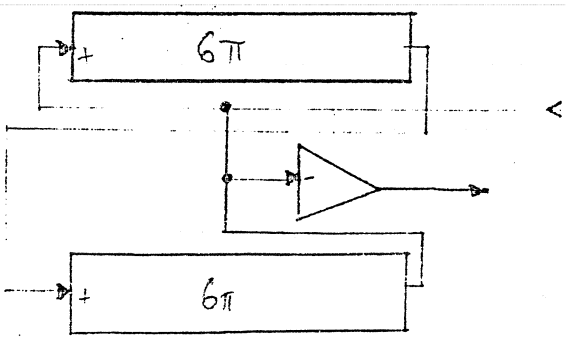

This is almost the same as vibrato except that part of the original signal is added to the phase shifted signal so that cancellation occurs every 2π phase shift.

(See wobulator pictures.)

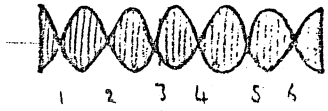

Phasing 2. is the same as phasing I except that the Switch 8 is closed and not switch 9.

WAA. Switches 5,6,7 and II are on.

In the three following modes, the audio signal is injected into the bow string drivers.

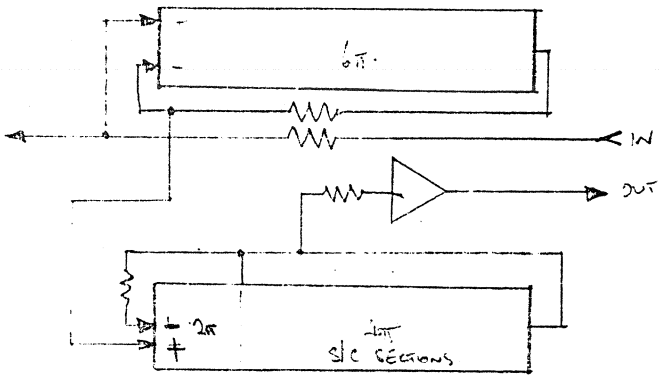

WAA applies feedback around both the phase filters.
Because 11 is closed, the most phase shift that can occur in the lower filter is 2π, hence only one peak can be produced. (Feedback around the phase filter makes it act as a band pass filter).

WAW & MEAW.

Switches 5,6,7 and IO are OII for both these modes.

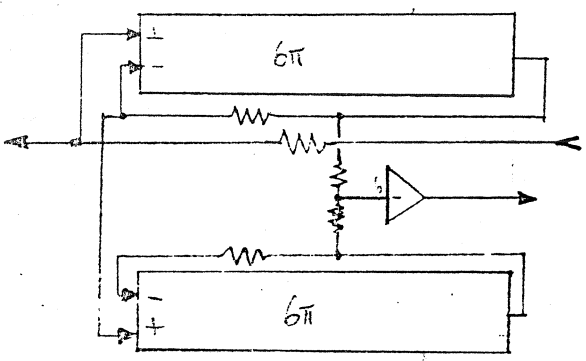

Feedback is applied around the phase filters so that a maximum of I2π phase shift is available, or six peaks. In the Waw mode a DC bias is applied to the lower bow string via R42. In the Meaw mode the control of the lower bow string is inverted (AII (I23) Q4).
ON.

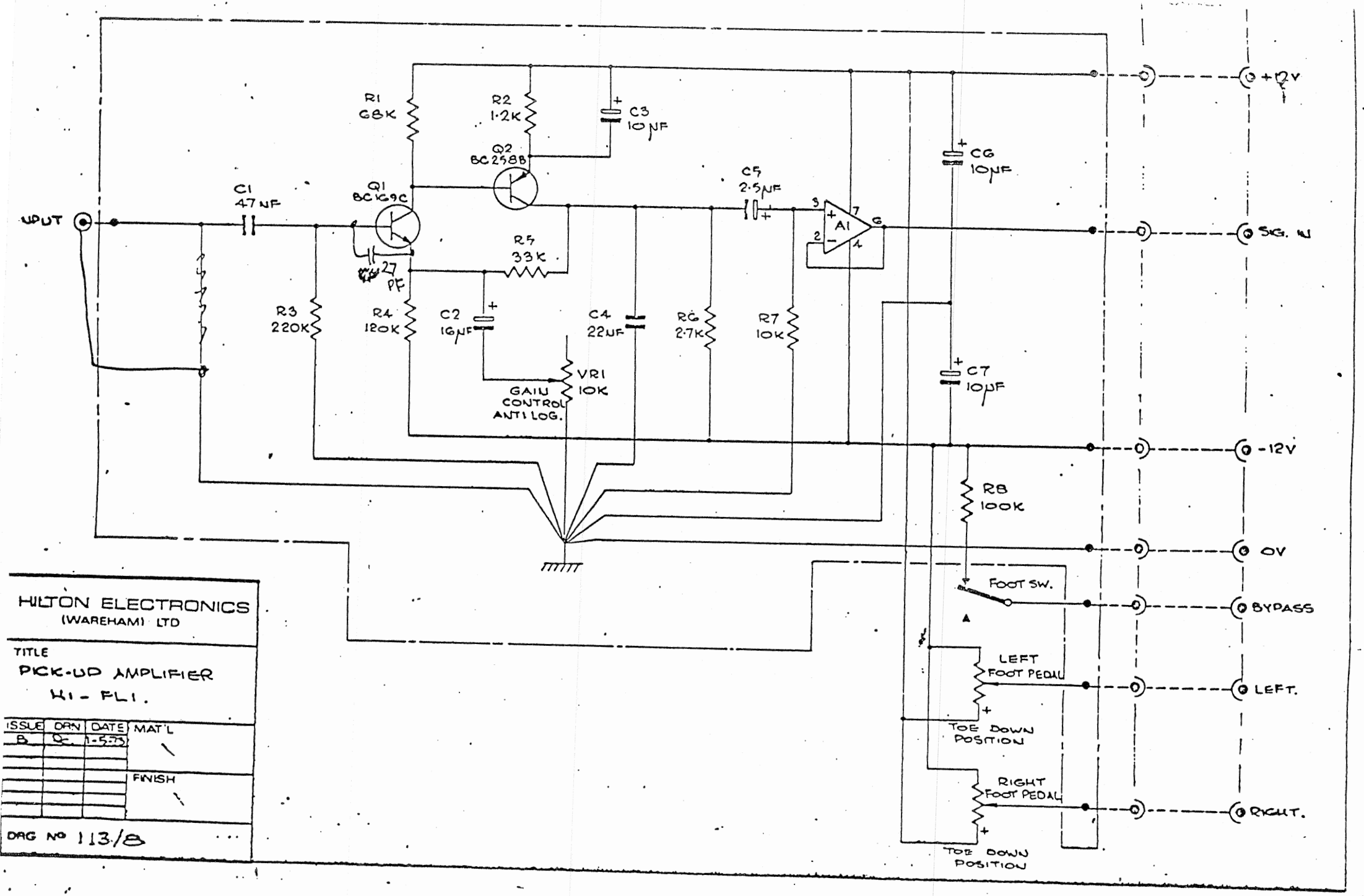
INPUT
C1 47NF
R1 68K
R2 1·2K
C3 10NF
Q2 BC258B
Q1 BC169C
27 PF
R5 33K
C5 2·5NF
A1
C6 10NF
R3 220K
R4 120K
C2 16NF
C4 22NF
R6 2·7K
R7 10K
VR1 10K
GAIN CONTROL ANTI LOG.
C7 10NF
R8 100K
FOOT SW.
LEFT FOOT PEDAL
TOE DOWN POSITION
RIGHT FOOT PEDAL
TOE DOWN POSITION
+12V
SIG. IN
-12V
0V
BYPASS
LEFT.
RIGHT.
HILTON ELECTRONICS (WAREHAM) LTD
TITLE
PICK-UP AMPLIFIER HI-FI1.
ISSUE B
DRN
DATE 1-5-73
MAT'L
FINISH
DRG NO 113/8

THESE ARE TEST POINTS

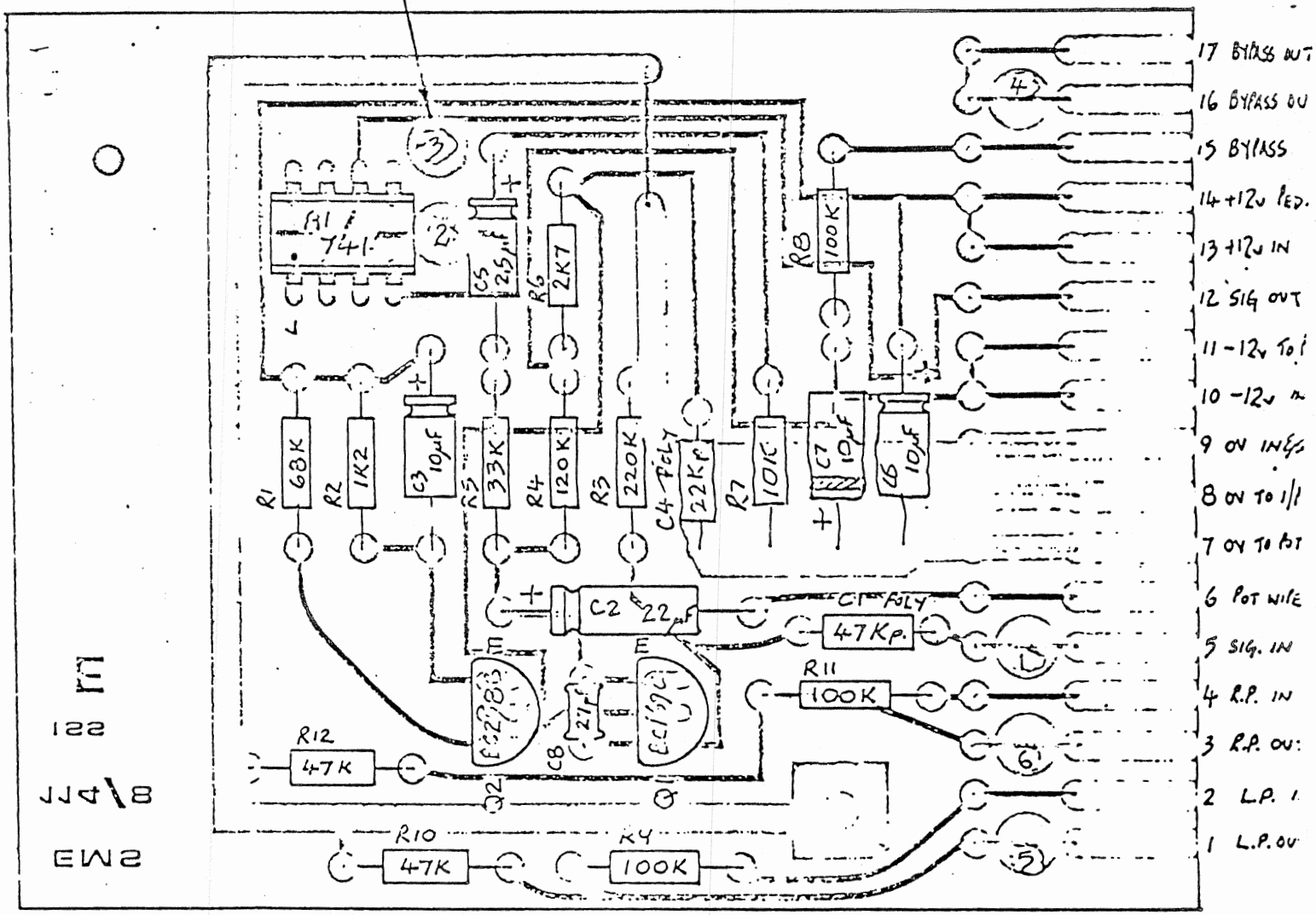

CONNECTED TO PLUG PIN:-
VIA
UMBILICAL CABLE COLOUR:-

HILTON ELECTRONICS (WAREHAM) LTD			
TITLE PEDAL AMPLIFIER PCB ASSEMBLY DRAWING			
ISSUE	DRN	DATE	MAT'L
E	NON	11-1-74	—
			FINISH
			—
DRG No 113/8			

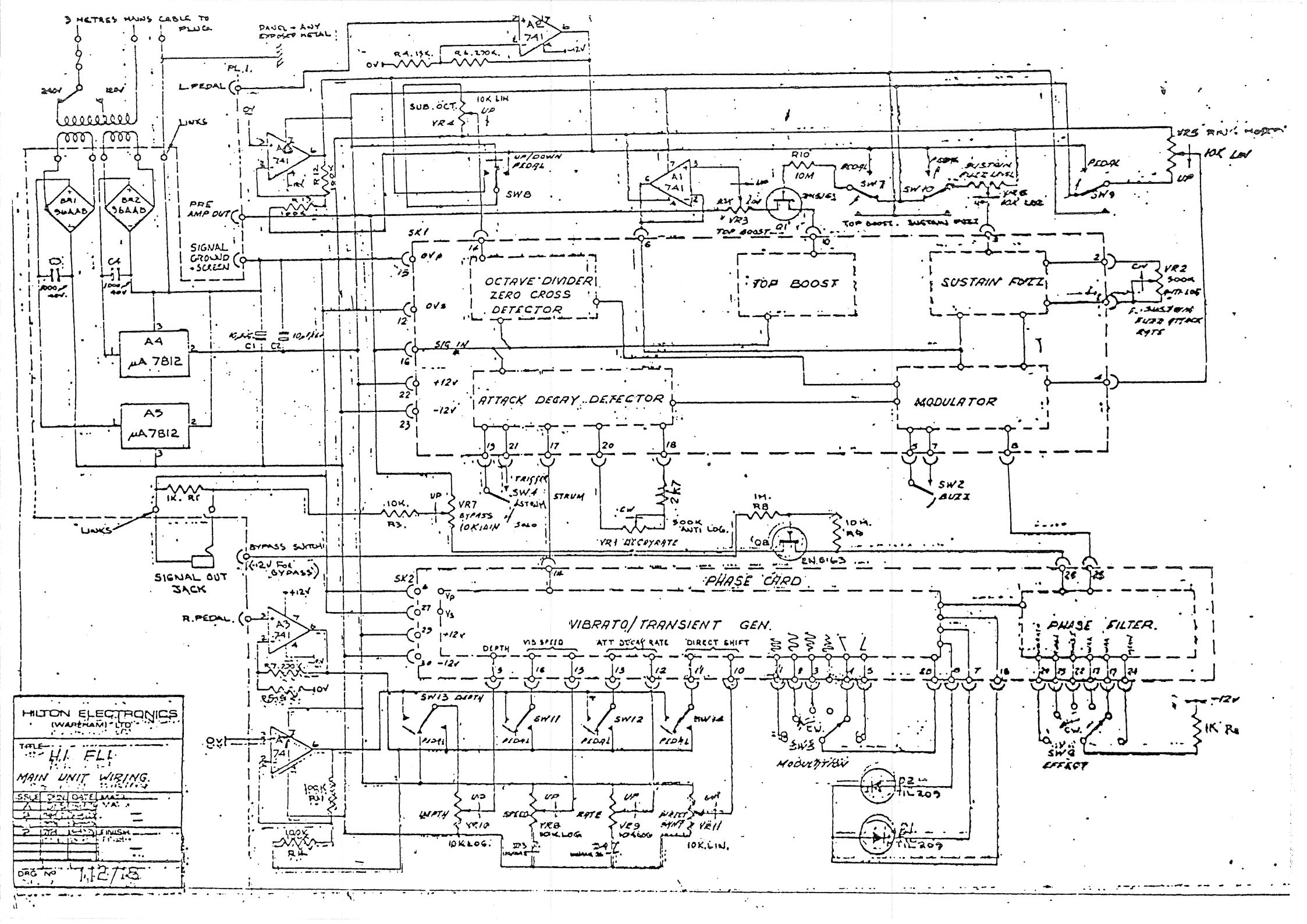
3 METRES MAINS CABLE TO PLUG
PANEL - ANY EXPOSED METAL
240V
120V
PL.1.
L.PEDAL
LINKS
BR1 36AAB
BR2 36AAB
C3 1000µF 40V
C4 1000µF 40V
A4 µA 7812
A5 µA7812
C1
C2
PRE AMP OUT
SIGNAL GROUND SCREEN
A1 741
A2 741
A3 741
A4 741
A5 741
R4 15K
R6 270K
0V
SUB. OCT.
VR4
10K LIN
UP
UP/DOWN PEDAL
SW8
R12
R13
R10
10M
PEDAL
SW7
SW10
SUSTAIN FUZZ LEVEL
VR6 10K LOG
VR3
TOP BOOST
Q1
VR5 BRIT. MODE
10K LOG
SW9
SK1
OVP
OVS
SIG IN
+12V
-12V
OCTAVE DIVIDER ZERO CROSS DETECTOR
TOP BOOST
SUSTAIN FUZZ
VR2 500K ANTI LOG
F. SUSTAIN FUZZ ATTACK RATE
ATTACK DECAY DETECTOR
MODULATOR
TRIGGER
SW4
ASTRIM
STRUM
SOLO
SW2 BUZZ
10K. R3.
VR7 BYPASS 10K LIN
2K7
500K ANTI LOG.
VR1 DECAY RATE
1M. R8
10M. R9
Q8
EN.8163
1K. R1
LINKS
BYPASS SWITCH
(+12V FOR BYPASS)
SIGNAL OUT JACK
PHASE CARD
SK2
Vp
Vs
R.PEDAL
R7 220K
R5 5.6K
VIBRATO/TRANSIENT GEN.
DEPTH
VIB SPEED
ATT DECAY RATE
DIRECT SHIFT
SW13 DEPTH
SW11
SW12
SW14
PEDAL
SW3
MODULATION
PHASE FILTER.
SW6 EFFECT
1K R6
R2 TIL209
R1 TIL209
R11 100K
R14 100K
WIDTH
VR10 10K LOG.
SPEED
VR8 10K LOG
RATE
VR9 10K LOG
WIDTH MINT
VR11 10K LIN.
HILTON ELECTRONICS (WAREHAM) LTD
TITLE H.I. FLI
MAIN UNIT WIRING.
ISSUE
DRN
DATE
MAT'L
FINISH
DRG No 712/13

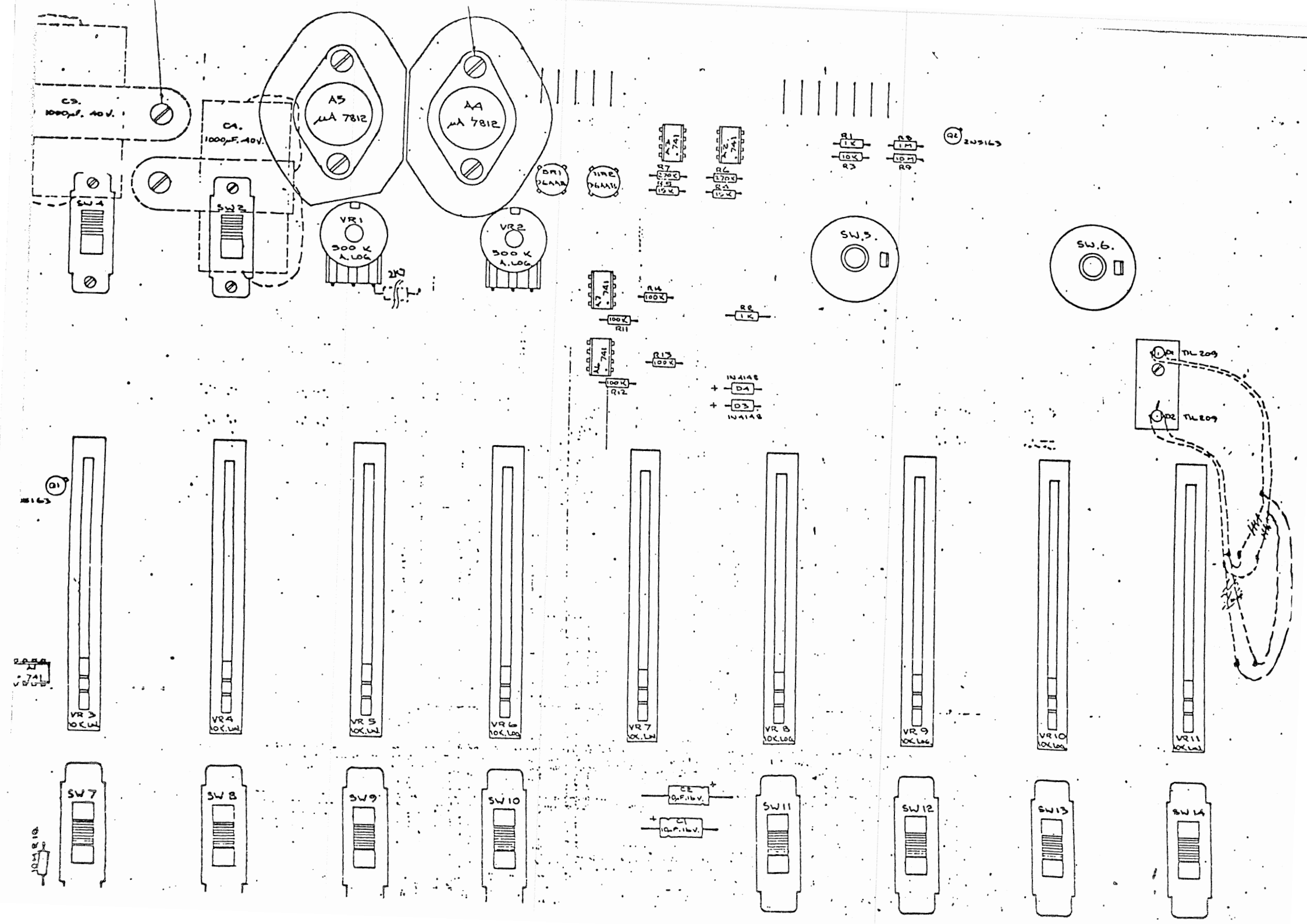
C3.
1000µF. 40V.
C4.
1000µF. 40V.
A5
µA 7812
A4
µA 7812
SW 1
SW 2
VR1
500 K
A.LOG
VR2
500 K
A.LOG
2K2
DR1
DR2
A2
741
A1
741
R7
270K
R5
15K
R6
270K
R4
15K
R1
1K
R3
10K
R8
1M
R9
10M
Q2
2N3163
SW.5.
SW.6.
R14
100K
R11
100K
R8
1K
A7
741
R13
100K
R12
100K
A6
741
D4
D3
1N4148
1N4148
TIL 209
TIL 209
Q1
2N3163
A3
741
VR 3
10K.LIN
VR4
10K.LIN
VR 5
10K.LIN
VR 6
10K.LOG
VR 7
10K.LIN
VR 8
10K.LOG
VR 9
10K.LOG
VR10
10K.LOG
VR11
10K.LIN
SW 7
SW 8
SW 9
SW 10
SW 11
SW 12
SW 13
SW 14
R10
10M
C2
0.1F.16V.
C1
10µF.16V.

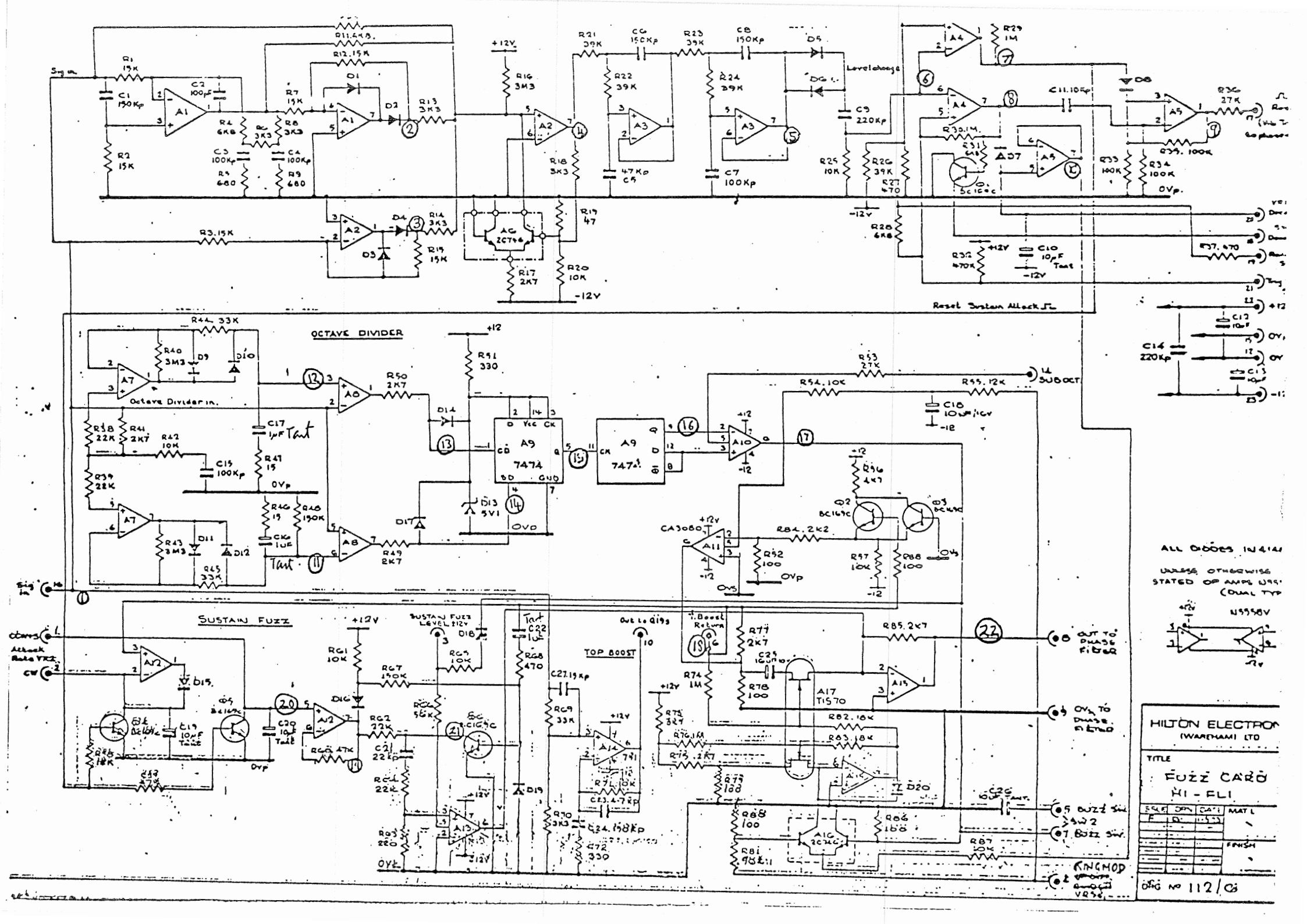
OCTAVE DIVIDER
SUSTAIN FUZZ
TOP BOOST
Reset Sustain Attack
Octave Divider in.
Sig in
Levelchange
ALL DIODES 1N4148
UNLESS OTHERWISE
STATED OP AMPS
HILTON ELECTRONICS
(WARNHAM) LTD
TITLE
FUZZ CARD
HI - FLI
DWG No 112/C1
KINGMOD

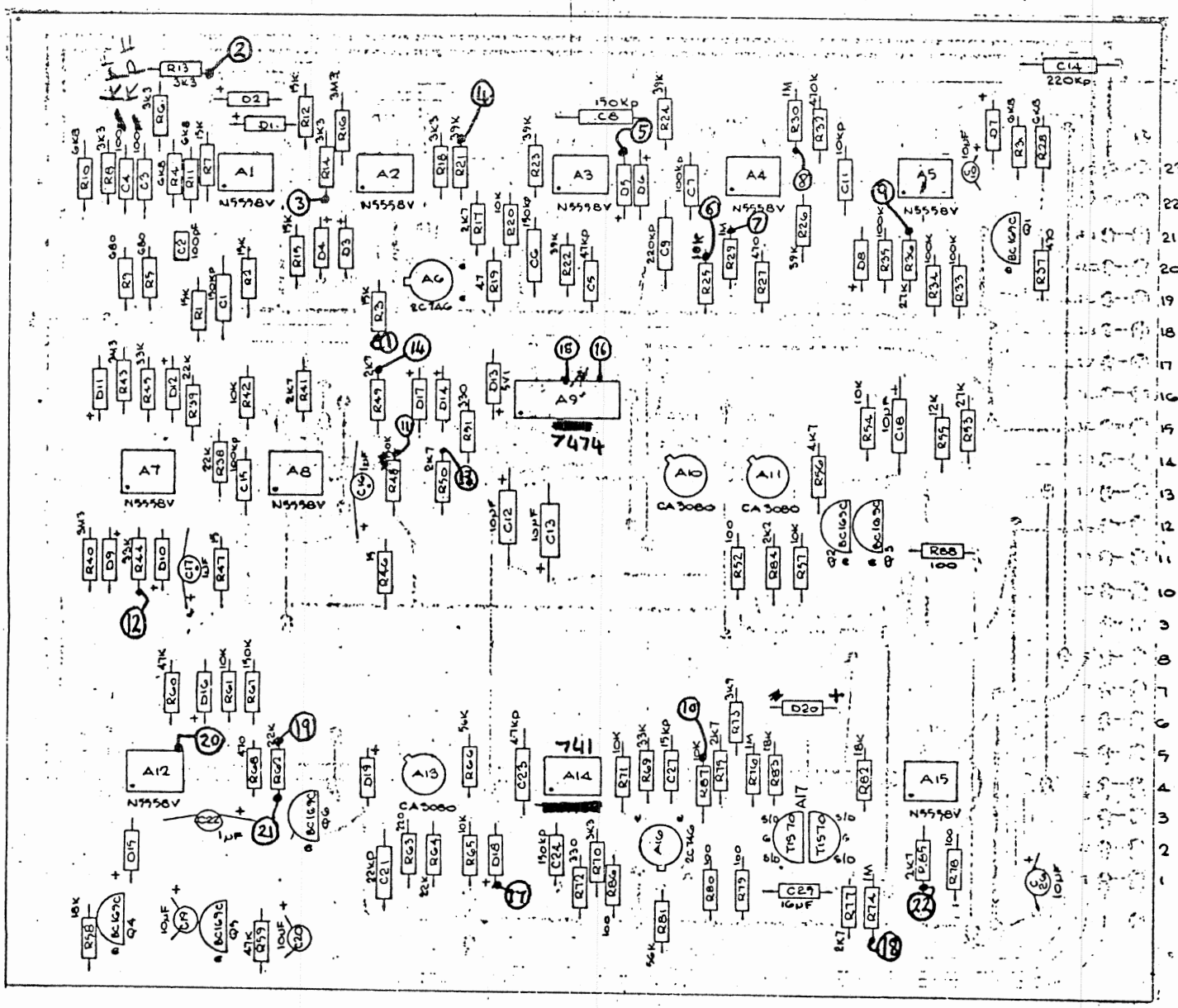

23 -12V
22 +12V
21 TRIG SENCE SW4
20 DECAY RATE VR1C
19 REDUCE SENSITIVITY SW4
18 DECAY RATE SW3
17 RESET VIBRATO
16 SIG IN
15 OVP
14 SLIDER VR4s.
13
12 OVs
11
10 OUT TO Q1
9 OVs TO PHASE FILTER
8 OUT TO PHASE FILTER
7 BUZZ SWITCH
6 TOP BOOST RETURN TO A1 PIN 6
5 BUZZ SWITCH
4 VR5s RING MOD
3 VR6s
2 ATTACK RATE VR2C
1 ATTACK RATE VR2

NOTE:-

1. ALL DIODES IN4148
2. TANT CAPACITORS C10, C19, C20 & C26. SPOT TO FACE P.C.B. ACCEPT C16, C17.
3. TIS 70's TO BE ARALDITED TOGETHER BACK TO BACK BEFORE ASSY.

HILTON ELECTRONICS (WAREHAM) LTD

TITLE

FUZZ CARD.

H1-FL1

ISSUE	CHN.	DATE	MATL
C	RC	5.5.71	1/16 EPOXY GLASS FIBRE COPPER 1 OZ.
			FINISH
			ROLLER TINNED

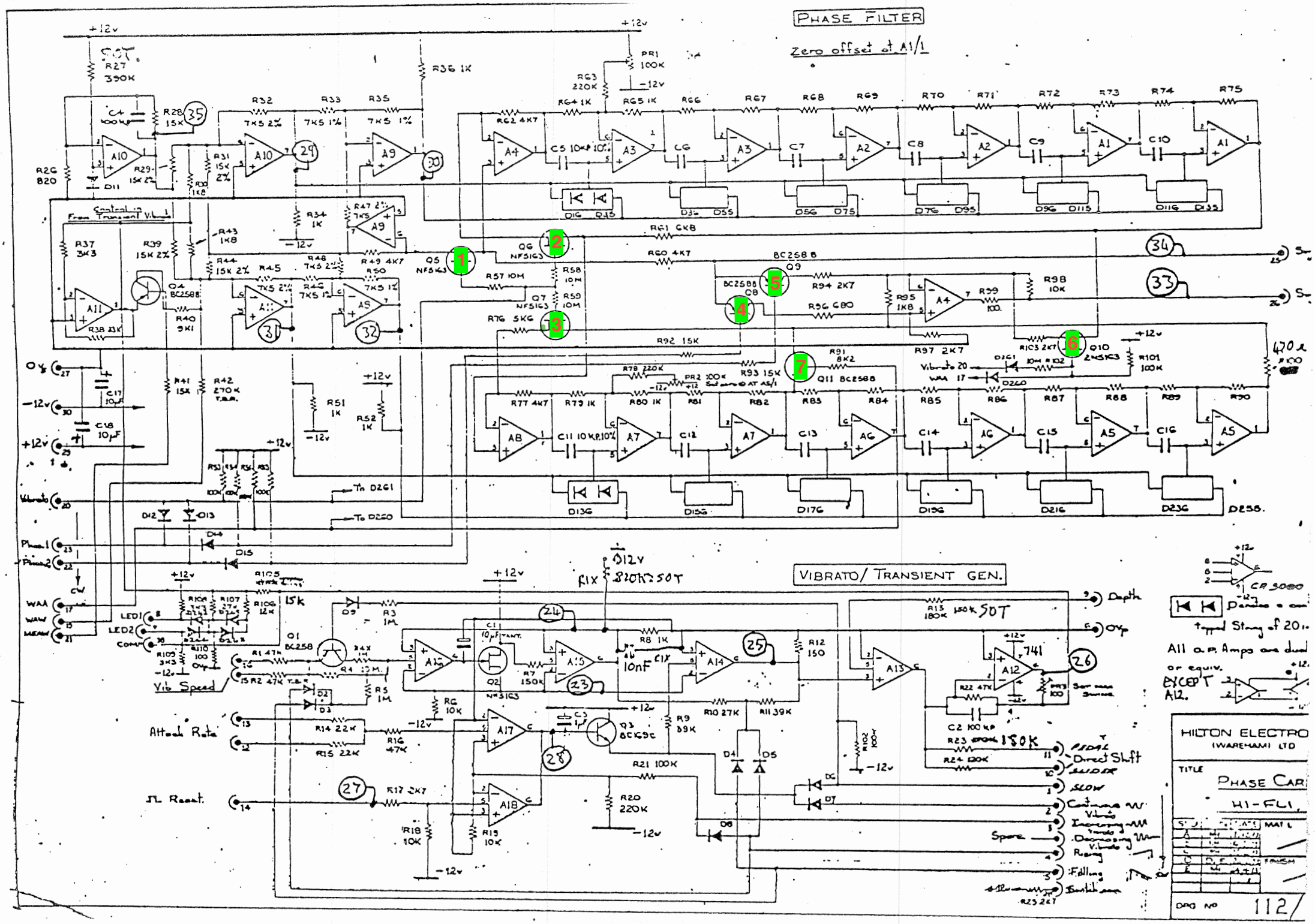
PHASE FILTER
Zero offset at A1/1
VIBRATO/ TRANSIENT GEN.
HILTON ELECTRO
(WAREHAM) LTD
TITLE
PHASE CAR
H1-FL1
DRG NO
112/
Depth
Vib Speed
Attack Rate
Reset
Direct Shift
SLOW
Spare
Rising
Falling
All op. Amps are dual
or equiv.
EXCEPT
A12.

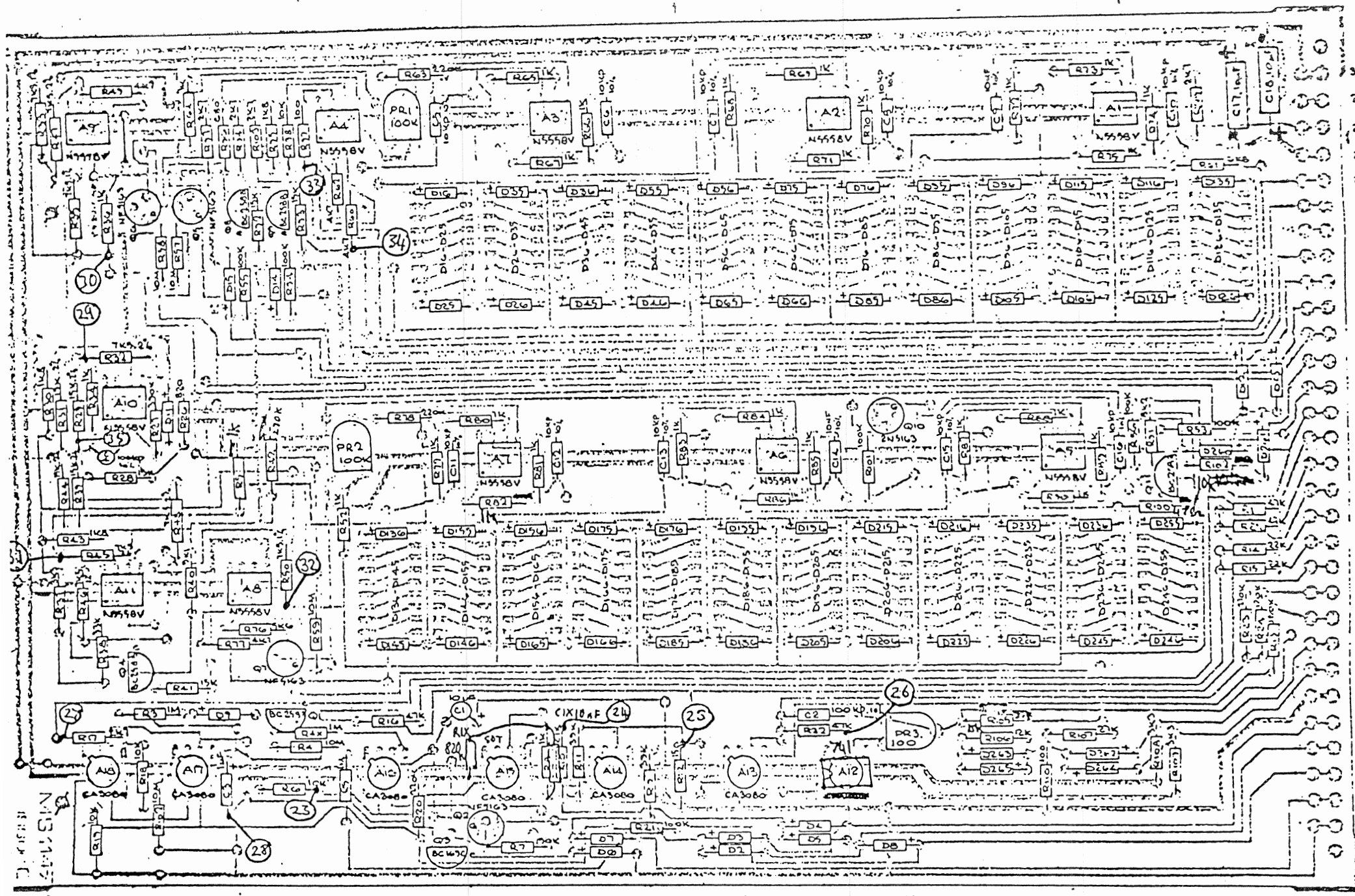

NOTE:-
1. ALL DIODES IN 4148

TEST SCHEDULE. FUZZ CARD

USE EXT TRIGGER
TIME BASE 20mS/cm
REFERENCE Y1

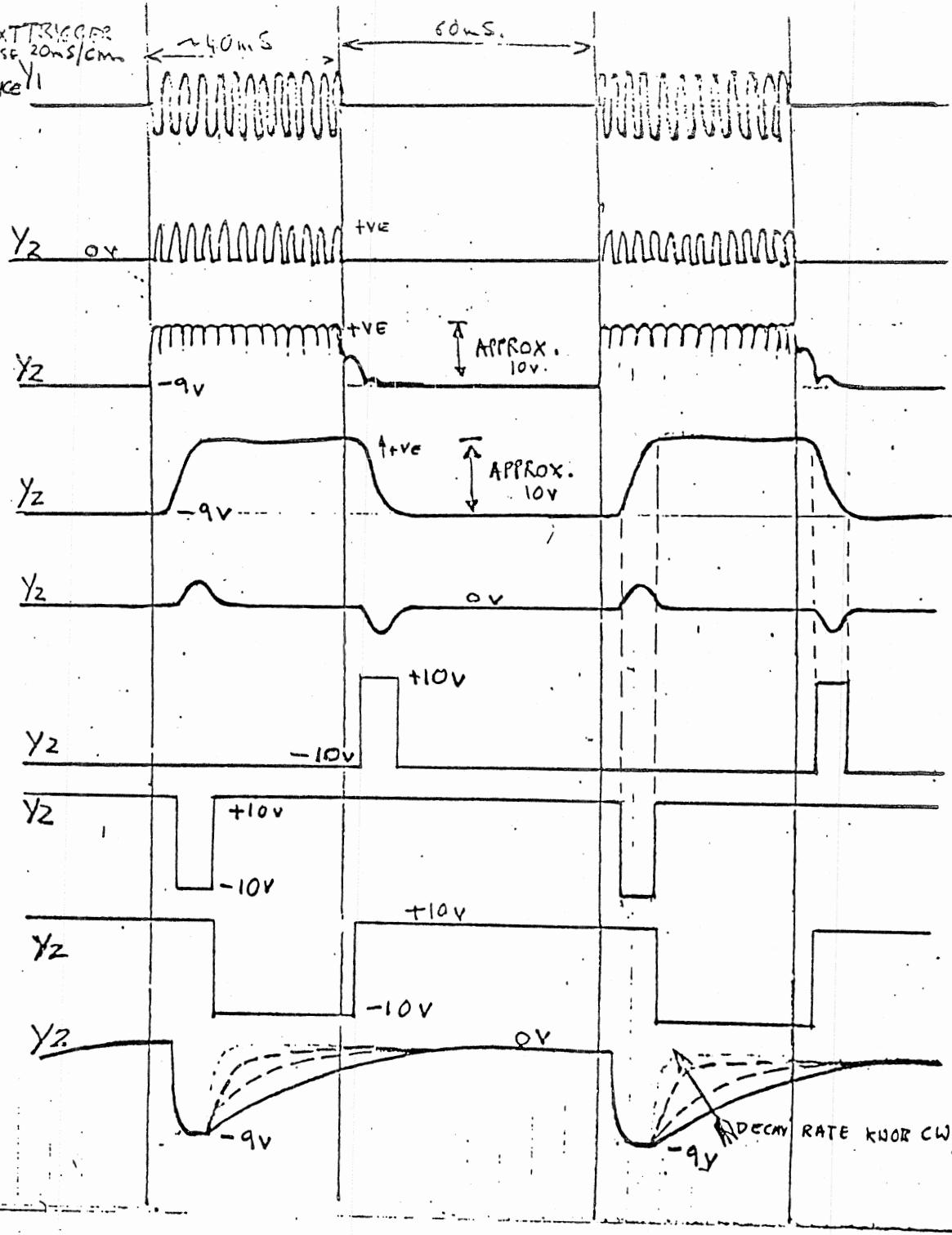

① 123456 all depend upon the gain of the Preamp.

②③ When the signal level is increasing the waveform suffers from the effects of diminishing returns. ④

The sensitivity switch SW4, marked solo, strum, modifies the HiFli's sensitivity to "start" signals. Turn down signal level until signal ⑧ nearly disappears; switch to strum; then ⑦ will disappear. ⑤ ⑥ ⑦ ⑧

If decay rate pot (refer text 10) is set at too long a decay, the signal size will become reduced. ⑨ ⑩

SIGNIC IN. PCB: PIN 16

TONE BURST. 1KHZ
Tone burst generator switc TO TONEBURST, FAST.

junction of D2, R13
" " D4, R14.
½ WAVE RECTIFICATION

A2 PIN 7
LOGRITHMICALLY COMPRESSE FULLWAVE RECTIFIED SIGNAL

A3 PIN 7.
LOGRITHMIC ENVELOPE FOLLOWER

A4 PIN 6.
DIFFERENTIATED ENVELOPE

A4 PIN 1
HYSTERIC STOP DETECTOR

A4 PIN 7
HYSTERIC START DETECTOR

A5 PIN 1
HYSTERIC RESET PULSE

A5 PIN 7.
DECAY RATE GENERATOR

Test (17). amplitude of signal is controlled by suboctave slider.

Test (19)(20) The attack rate is controlled by the attack rate slider. The final amplitude is proportional to the input signal level. Turn up preamp gain and the waveforms at (19) (20) (21) increase, although the attack time constants remain the same.

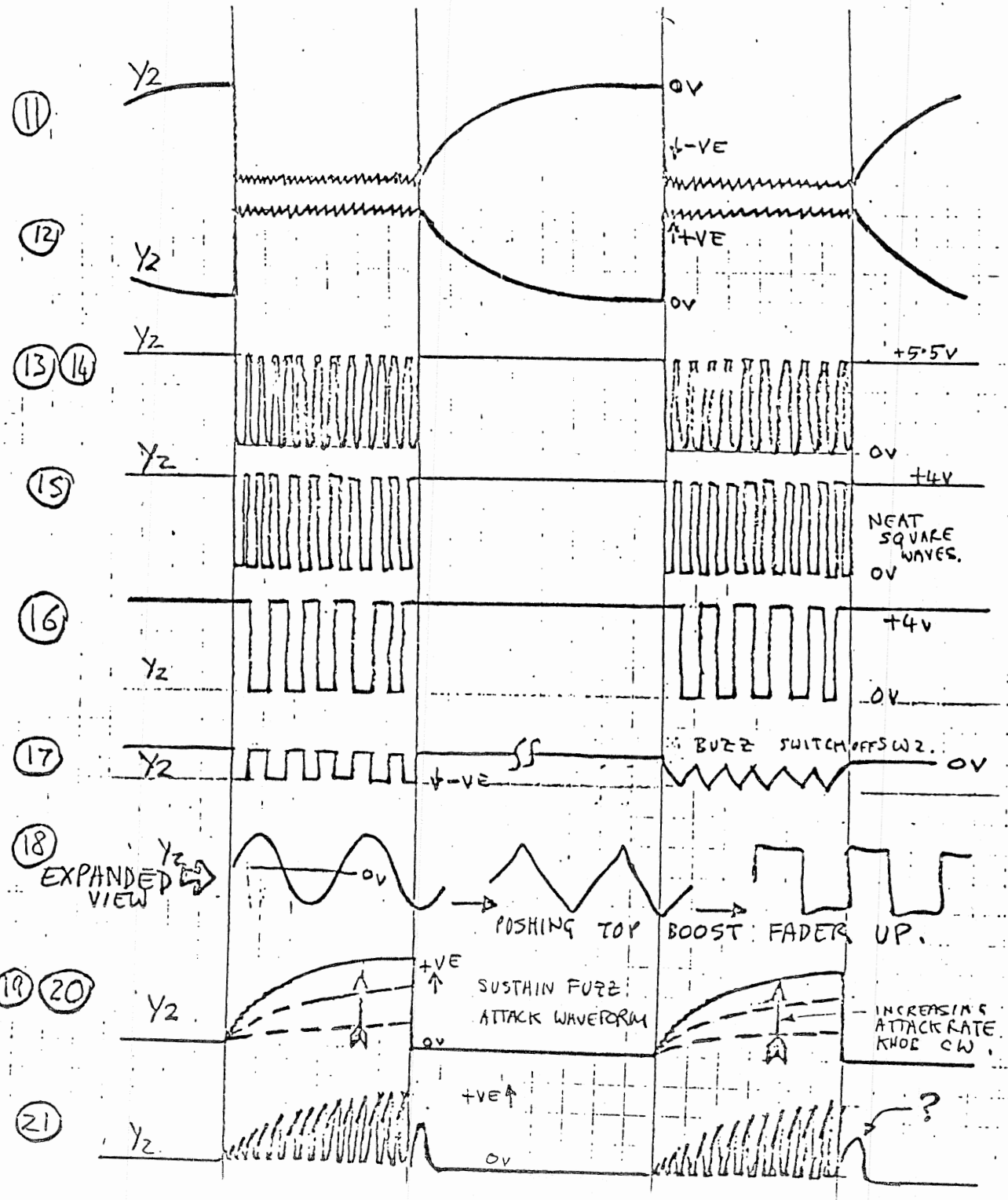

A8 PIN 6
ENVELOPE FOLLOWER
FIXED TIME CONSTANT

A8 PIN 2
ENVELOPE FOLLOWER
FIXED TIME CONSTA

A9 PIN 1
and A9 PIN 4.

A9 PIN 5

A9 PIN 9.
SUBOCTAVE OUTPU

A10 PIN 6.
SUBOCTAVE MODULATI
AMPLITUDE ∝ TO SUBOCT

PCB PIN 6
TOP BOOST RETURN

PIN 7 - A12
AND PIN 5 - A12
FINAL VALUE IS
PROPORTIONAL TO MPS
AMPLITUDE OF TONE

COLLECTOR OF Q6.
SUSTAIN FUZZ WAVEF

WITH the sustain FUZZ FADER UP AND THE ATTACK RATE SET AT SLOW, THE OUTPUT SHOULD BE VERY SMALL.

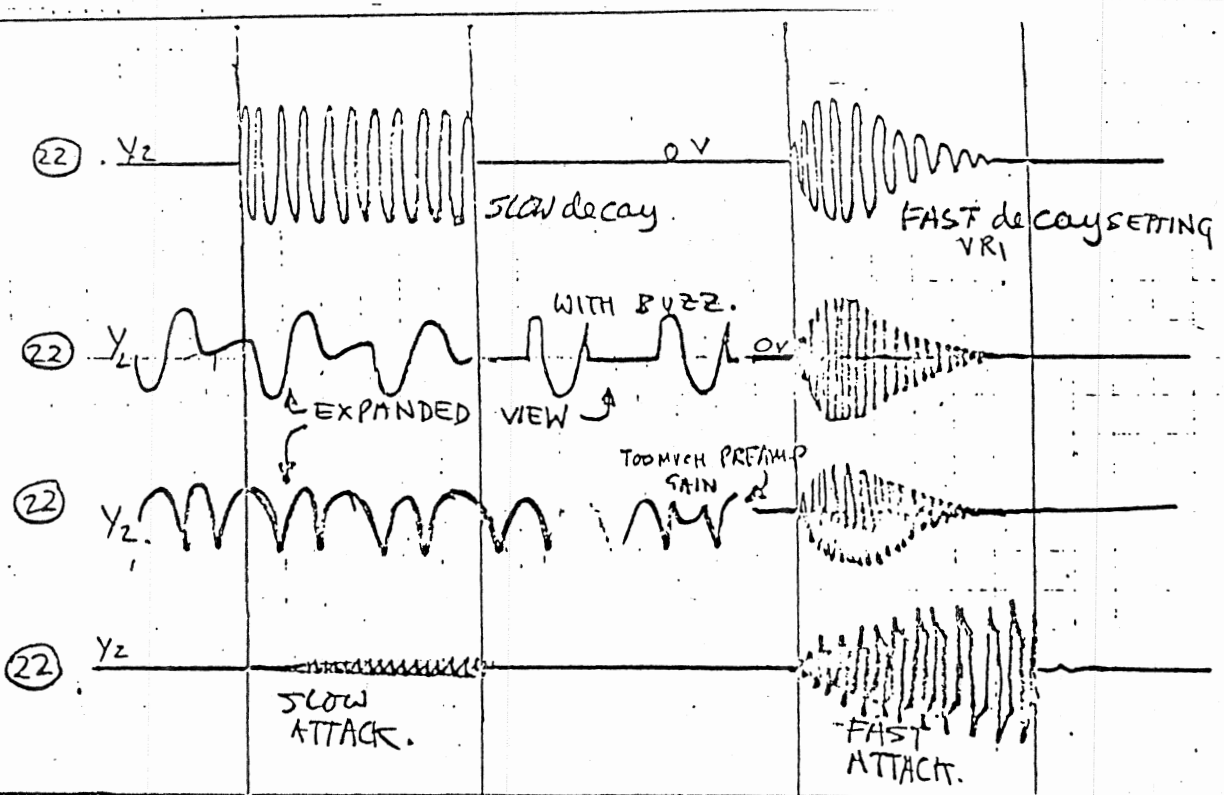

A15 PIN 1
All faders down.
output is the unprocessed signal.

SUBOCTAVE FADER UP

RING MOD FADER U

SUSTAIN FUZZ FADER

PHASE CARD.

SWITCH TRIGGER TO Y1
TRIGGER OFF OF →

INTERNAL FUNCTION GENERATOR.

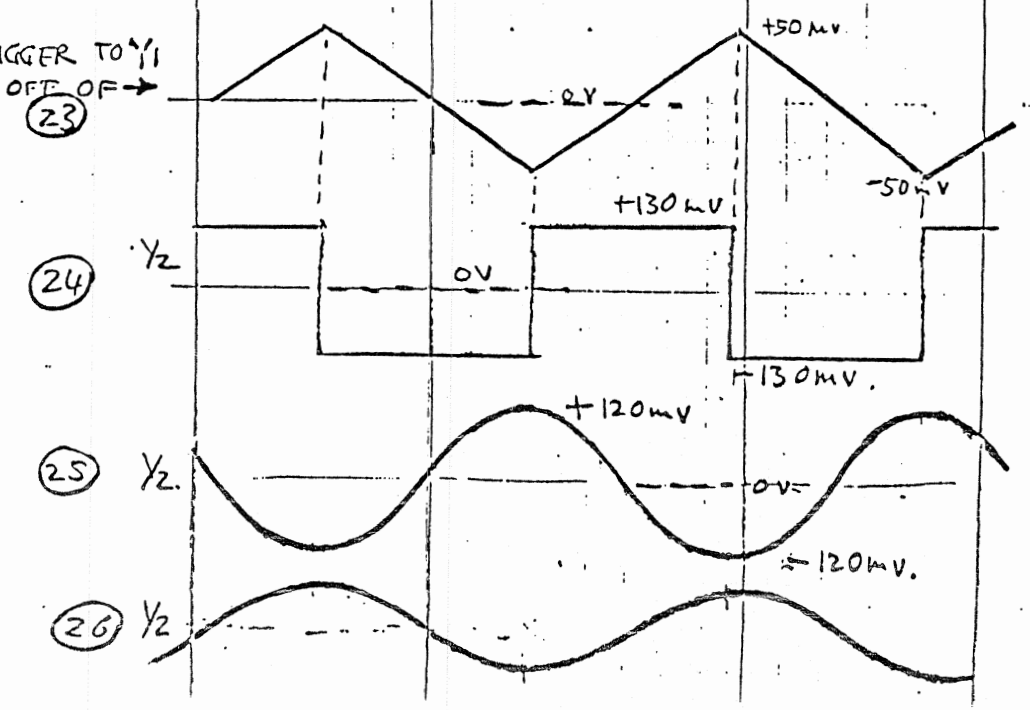

A15 PIN 2.
CONTROL MODULATION SWITCH SET TO ∿∿. FREQUENC TRIANGLE CONTROLLED BY MODULATION SPEED SLID
ALSO, TRY ~ MODE

A15 PIN 6.

A14 PIN 6 SNIP THE SOT RESISTOR IF WAVEFORM IS ASYMETRIC.

A12 PIN 6. The Amplitude should be directly controlled bu effect depth slider. The Direc Slider will directly alter the

SWITCH Back to external trigger. ie Tone Burst.

T.28 is the Ramp modulation. It is combined with the sinewave to give ⩘ and ∿∿ waveforms.

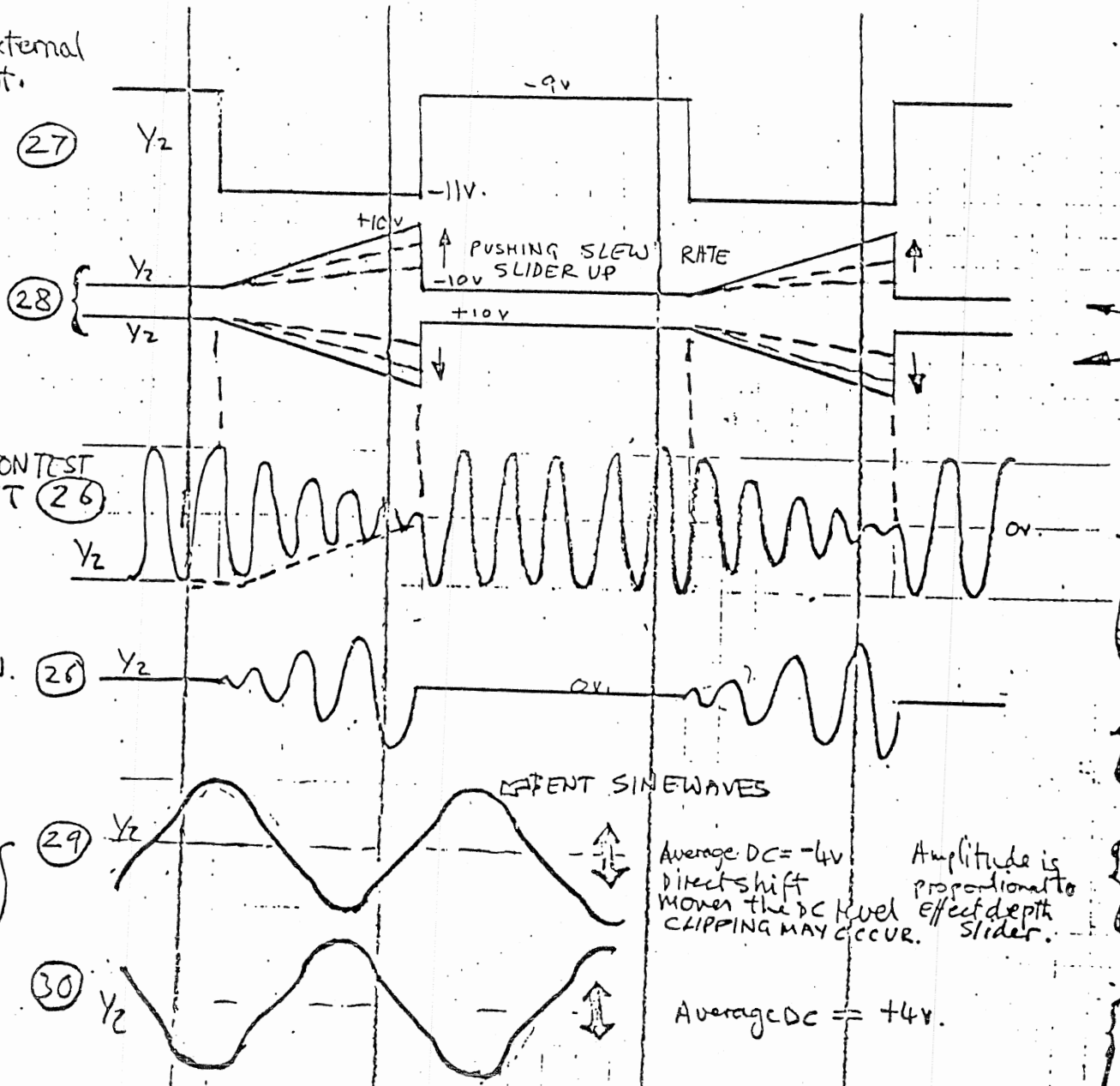

PCB PIN14. reset pulse.

A17 PIN6 modulation switch set at ⩘ and at ∿∿

A12 PIN6. control modulation set to ⩘ SWITCH Tone burst to slow CRO Timebase to 120ms/c EFFECT: Depth to MAXIMUM DIRECT SHIFT IN CENTRE MODULATION SPEED to MAX. SCEW RATE to ⅓ UP.

AS ABOVE, EXCEPT. cont MODULATION SET TO ∿∿

MENT SINEWAVES

Average DC = -4v Direct shift moves the DC level CLIPPING MAY OCCUR.

Amplitude is proportional to effect depth slider.

A10, 7 SWITCH MODULATION TO Modulation Speed slider. Tone burst set to continuo Trigger off of Y2

DIODE BOWSTRING DRIVERS

Average DC = +4v.

A9, 1 complementary Test point 29 and independa of control modulation settin as long as tone burst is set continuous.

SIMILARLY FOR A11 PIN7 (31) and A8 PIN7 (32) respectively.

* Note that when the modulation effect is set at MEOW, the control